COUNTER-TOP INDUCTION WOK

MWG1800, MWG2500, MWG3000, MWG3500

Product Name	Counter-top Induction Wok	Quantity		Item #	

Note: Induction cooking requires the use of induction compatible (i.e. magnetic) COOKWARE.

Standard Features

- Portable tabletop design with stainless steel housing, heavy duty electronic components, and specifically engineered, high-impact, high-temperature recessed glass-ceramic wok bowl designed for use in commercial kitchens
- Pan Maximizer feature and an induction coil that surrounds glass-ceramic bowl allow for maximum heating of induction compatible wok pan
- Control knob for ease of use setting automatic power
- Equipped with 20 power cook settings
- Sloped front panel allows for easy viewing and operation
- Microprocessor monitors vital components 120 times per second to check for overheating, power supply problems, and more. Wok unit shuts off and displays error codes enabling user to diagnose and correct minor problems
- LED display for precise user feedback
- Automatic pan detection allows for instant energy transmission to pan, and almost no energy consumption when pan is not present
- Automatic shut-off feature prohibits overheating
- Integral grease filter and air baffle to ensure cleaner and cooler air intake
- Easy to clean surface
- Integral fan keeps internal electronics cool
- Available in 1800 watts (100-120VAC), 2500, 3000, and 3500 watts (200-240VAC).
- 14” stainless steel induction compatible wok pan available as an accessory
- Three year limited warranty inUS and Canada only - see statement for details
- Made in the USA*

Specifications

Shall be a CookTek counter-top induction wok, model _____ with a total kW rating of _____.

Unit shall be manufactured in the United States and constructed of a stainless steel housing with a specifically engineered, high-impact, high-temperature, recessed glass-ceramic wok bowl to accommodate wok pan.

Unit shall be equipped with a microprocessor with auto shut-off to prevent overheating, self-diagnostics, and a pan maximizer feature that ensures maximum heating of induction compatible wok pans.

Unit shall have adjustable control knob with 20 power cook settings.

Unit shall operate on _____ power with integral _____ cord and plug (supplied).

*of USA and imported parts

CookTek Induction Systems, LLC
156 N. Jefferson St. Ste 300
Chicago, IL 60661-1436, USA
www.cooktek.com

Tel: 1.312.563.9600 Fax: 1.312.432.6220
Toll Free: 1.888.COOKTEK (266.5835)
Toll Free Fax: 1.888.COOKFAX (266.5329)

COUNTER-TOP INDUCTION WOK
MWG1800, MWG2500, MWG3000, MWG3500

COUNTER-TOP INDUCTION WOK

MWG1800, MWG2500, MWG3000, MWG3500

COUNTER-TOP INDUCTION WOK

MWG1800, MWG2500, MWG3000, MWG3500

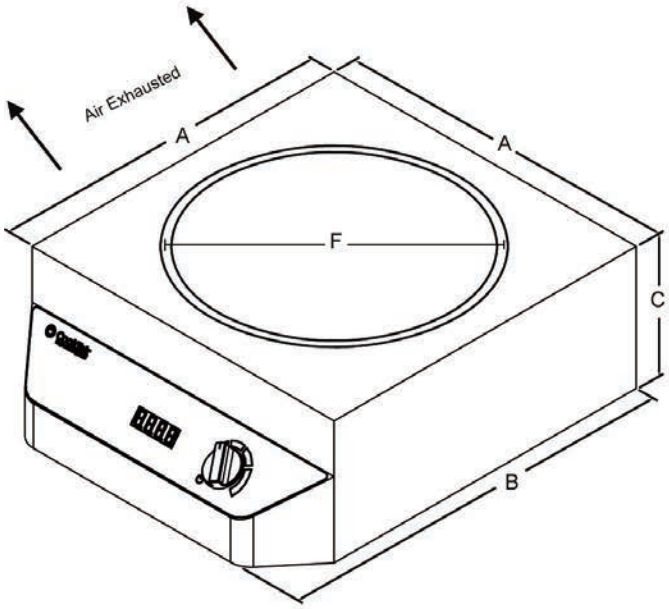

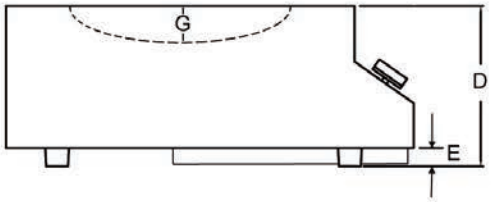

Dimensions		
	inches	mm
A	14.75	374
B	17.25	438
C	6.09	154
D	7.33	186
E	1.25	31
F	11.75	298
G	2.54	65

- Dedicated circuit required
- Requires maximum (do not exceed) ambient temperature of 50˚C/122˚F
- Cooling clearance: 2” (55mm) for front and rear

Specifications

Model Number	MWG1800	MWG2500	MWG3000	MWG3500
Power Requirements	100-120VAC, 1Ph	200-240VAC, 1Ph	200-240VAC, 1Ph	200-240VAC, 1Ph
Power Consumption	1800W (max)	2500W (max)	3000W (max)	3500W (max)
BTU Comparison	16,000 BTU	22,000 BTU	26,000 BTU	31,000 BTU
Voltage	100-120VAC, 50/60 Hz	200-240VAC, 50/60 Hz	200-240VAC, 50/60 Hz	200-240VAC, 50/60 Hz
Amperage	15A (max)	11A (max)	13A (max)	15A (max)
Power Range	100-1800W	100-2500W	100-3000W	100-3500W
Dimensions (in)	17.25” x 14.75” x 7.33”	17.25” x 14.75” x 7.33”	17.25” x 14.75” x 7.33”	17.25” x 14.75” x 7.33”
Dimensions (mm)	438 x 374 x 186	438 x 374 x 186	438 x 374 x 186	438 x 374 x 186
Weight	22 lbs / 9.98 kg	22 lbs / 9.98 kg	22 lbs / 9.98 kg	22 lbs / 9.98 kg
Packaged Weight	27 lbs / 12.25 kg	27 lbs / 12.25 kg	27 lbs / 12.25 kg	27 lbs / 12.25 kg
Packaged Dimensions (in)	24” x 23” x 13”	24” x 23” x 13”	24” x 23” x 13”	24” x 23” x 13”
Packaged Dims. (mm)	609 x 584 x 330	609 x 584 x 330	609 x 584 x 330	609 x 584 x 330
Power Cord Length	6 ft / 1.8 m	6 ft / 1.8 m	6 ft / 1.8 m	6 ft / 1.8 m
Plug Type	NEMA 5-15P	NEMA 6-20Pin US/Canada - country specific elsewhere		
Warranty	36 months limited parts and labor in US and Canada only - see statement for details			

Note: Ambient air should not exceed 50˚C/122˚F. Dedicated circuit required. Many local codes exist, and it is the Owner and Installer’s responsibility to comply with those codes. CookTek continually improves its products and reserves the right to change or improve specifications without notice.

CookTek Induction Systems, LLC
156 N. Jefferson St. Ste 300
Chicago, IL 60661-1436, USA
www.cooktek.com

Tel: 1.312.563.9600 Fax: 1.312.432.6220
Toll Free: 1.888.COOKTEK (266.5835)
Toll Free Fax: 1.888.COOKFAX (266.5329)